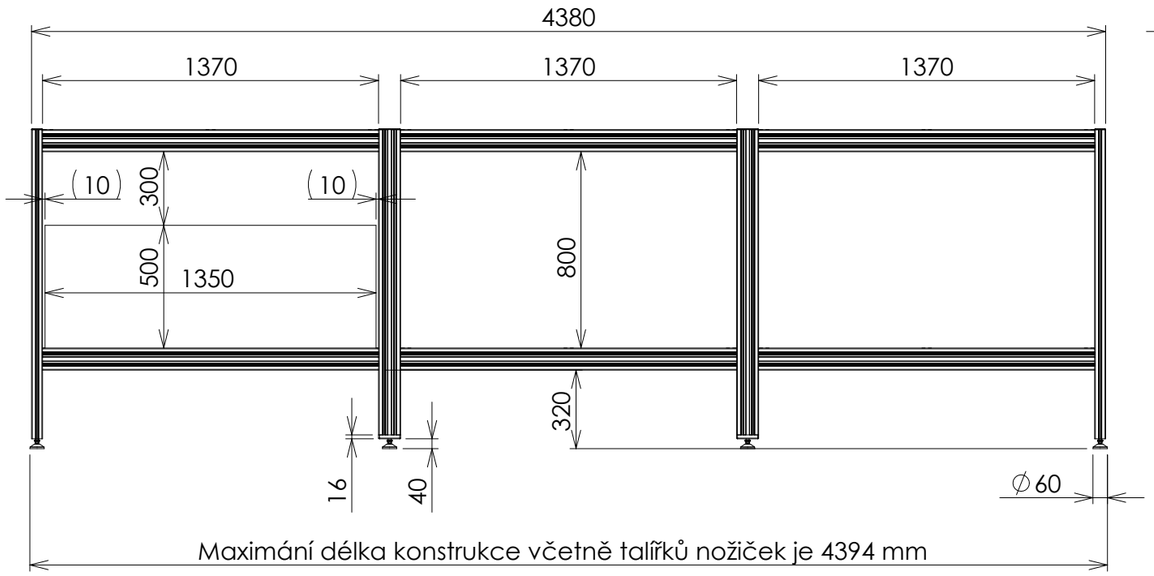

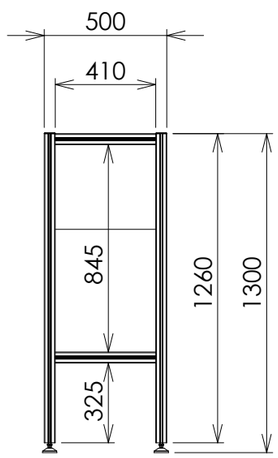

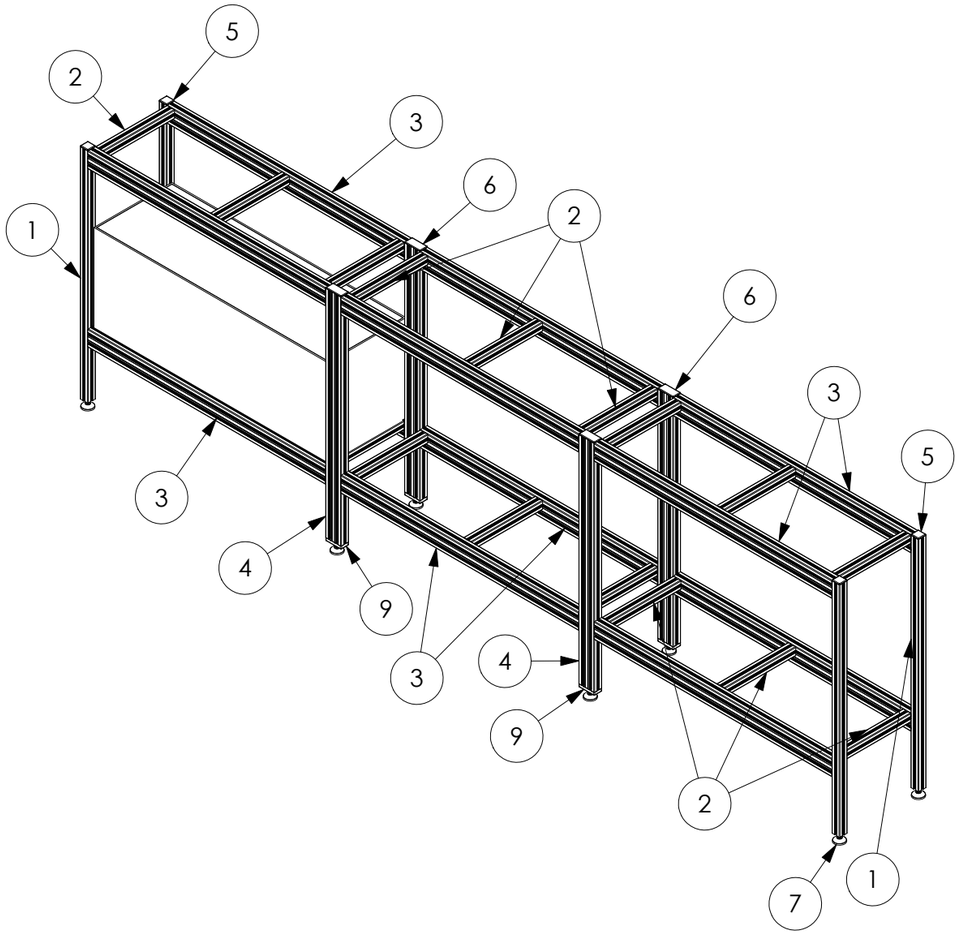

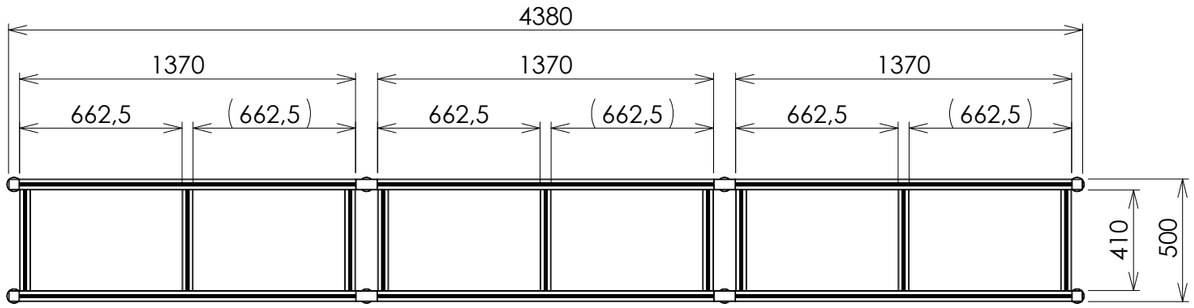

POUŽITÉ PROFILY NA KONSTRUKCI

M 1: 2

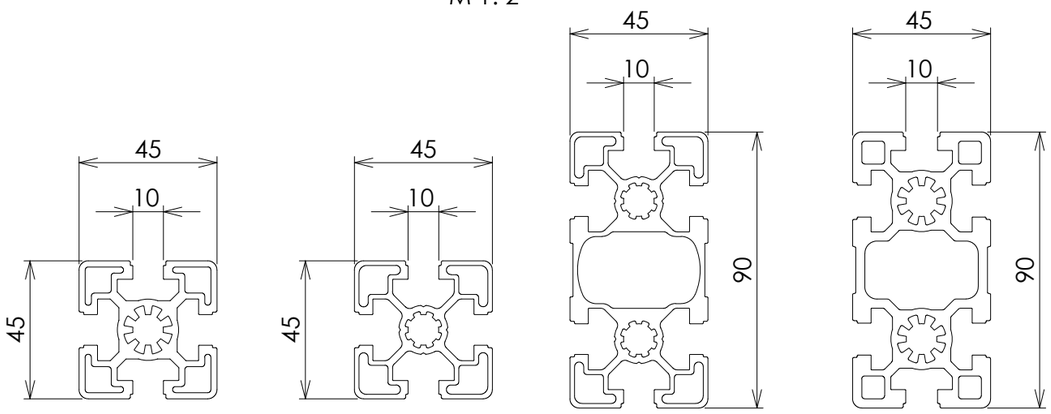

POS.	QTY.	LENGTH	PartNo	DESCRIPTION
1	4	1260	450 100 012	Profil 10 45x45
2	18	410	450 100 011	Profil 10 45x45L
3	12	1370	450 100 020	Profil 10 45x90L
4	4	1244	450 100 021	Profil 10 45x90
5	4		450 400 007	Krycí víčko profilu 45x45 - N 10
6	4		450 400 012	Krycí víčko profilu 45x90 - N 10
7	8		200 100 022	Stavitelná kloubová noha D 60 M12x100 - PA
8	1		ASKMT	Akvárium
9	4		450 300 103	Upevňovací deska 45x90 - M12

THIS DRAWING IS THE PROPERTY OF ING. MARTIN BELINA - ASKMT AND MAY NOT BE COPIED OR DISCLOSED TO THE THIRD WITHOUT OUR WRITTEN PERMISSION

DESIGNED BY:	ING. MARTIN BELINA 12.06.2020	PROJECT:	ASKMT PROJECT
MATERIAL:	COMPONENTS ASKMT		
TOTAL WEIGHT:	426.62 KG		
FINISHING:	WITHOUT FINISHING	DRAWING NAME:	VARIANTA 04_1200231 - C
TOLERANCE:	DIN ISO 2768 FINE		
EDGES:	-0.2 +0.4		

ASKMT
www.askmt.com

DRAWING NUMBER	DIMENSIONS UNITS		
ASKMT	mm		
SCALE	FORMAT	LANG.	SHT/NUMB.
1:25	A3	EN	1/1

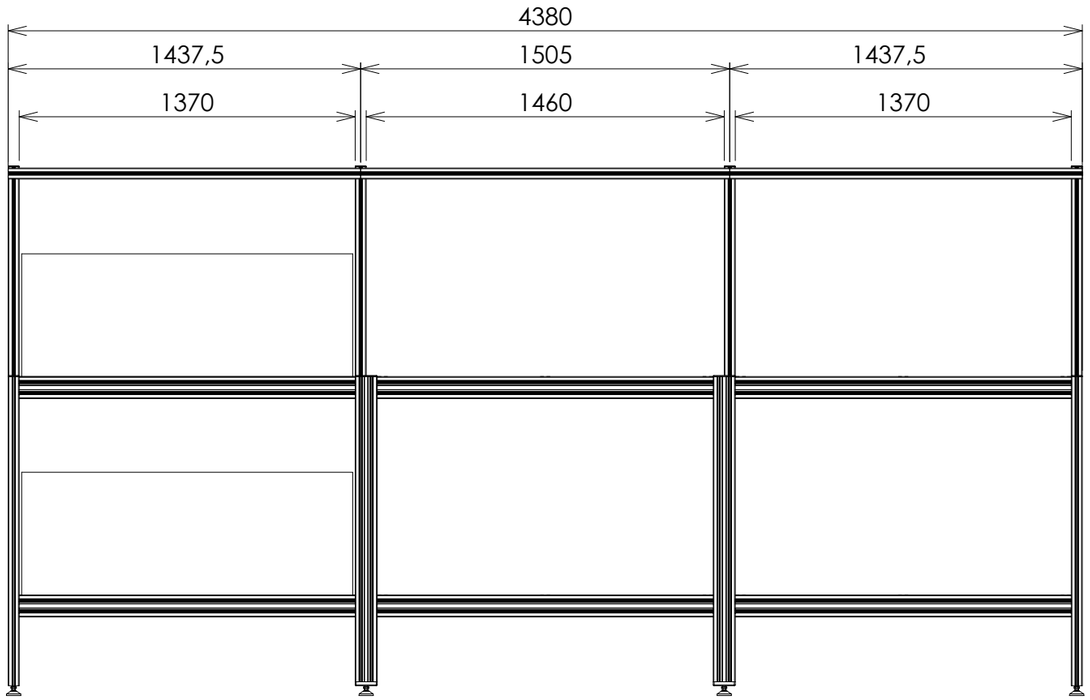

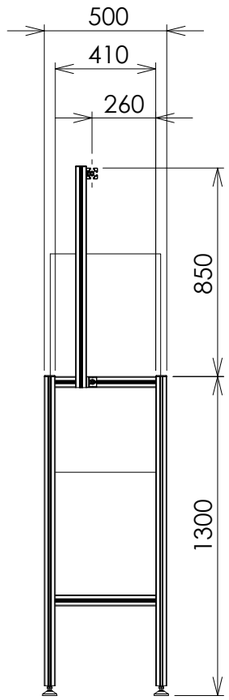

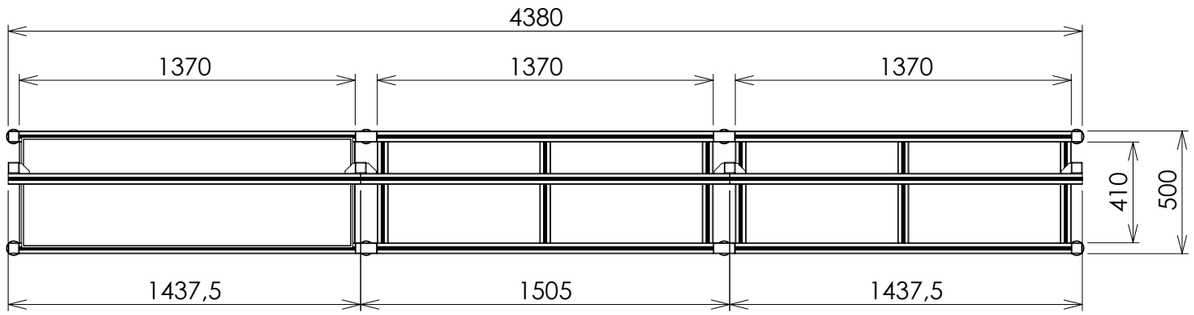

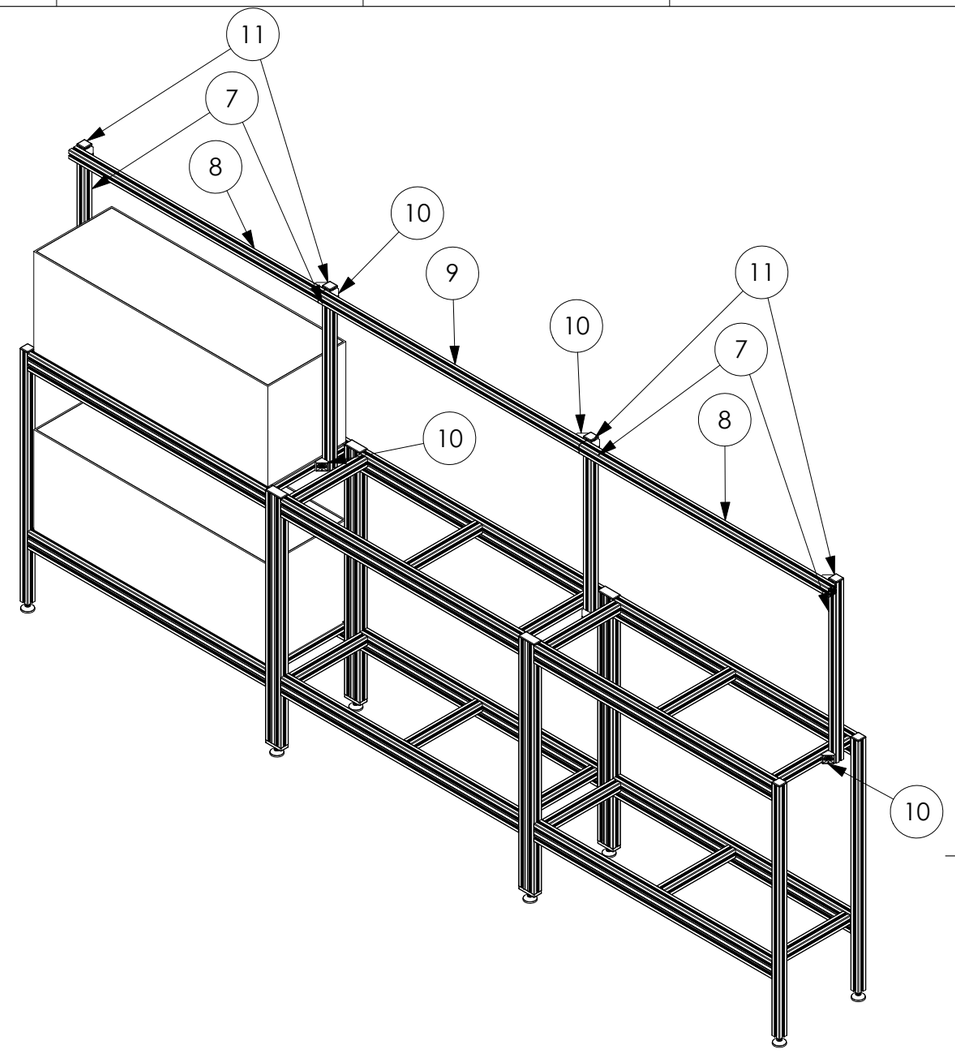

POUŽITÉ PROFILY NA KONSTRUKCI

M 1: 2

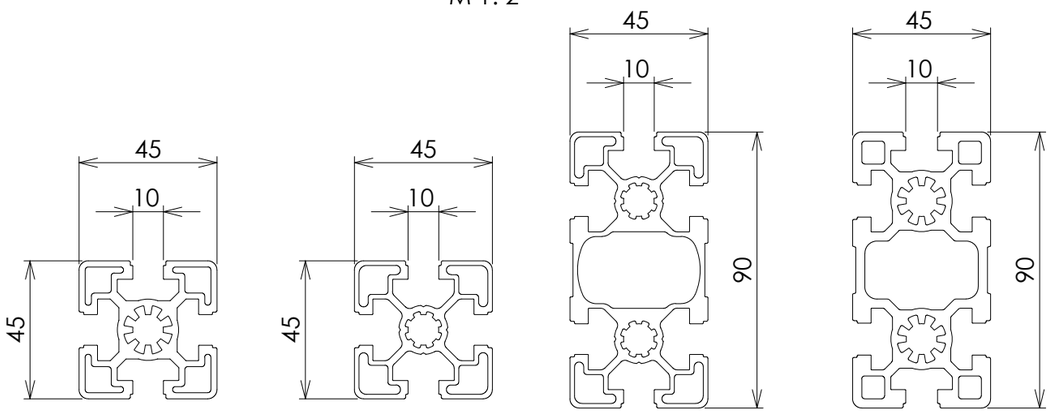

POS.	QTY.	LENGTH	PartNo	DESCRIPTION
7	4	900 mm	450 100 011	Profil 10 45x45L
8	2	1437,50 mm	450 100 011	Profil 10 45x45L
9	1	1505 mm	450 100 011	Profil 10 45x45L
10	10		450 300 010	Úhelník 45x45 s upínací sadou - N 10
11	8		450 400 007	Krycí víčko profilu 45x45 - N 10

THIS DRAWING IS THE PROPERTY OF ING. MARTIN BELINA - ASKMT AND MAY NOT BE COPIED OR DISCLOSED TO THE THIRD WITHOUT OUR WRITTEN PERMISSION

DESIGNED BY:	ING. MARTIN BELINA	12.06.2020
MATERIAL:	COMPONENTS ASKMT	
TOTAL WEIGHT:	772.06 KG	
FINISHING:	WITHOUT FINISHING	
TOLERANCE:	DIN ISO 2768 FINE	
EDGES:	-0.2	+0.4

PROJECT: ASKMT PROJECT

DRAWING NAME: VARIANTA 04_1200231 - C

ASKMT
www.askmt.com

DRAWING NUMBER	DIMENSIONS UNITS		
ASKMT	mm		
SCALE	FORMAT	LANG.	SHT/NUMB.
1:25	A3	EN	1/1